KALFIRE
FIREPLACES

G80-48F

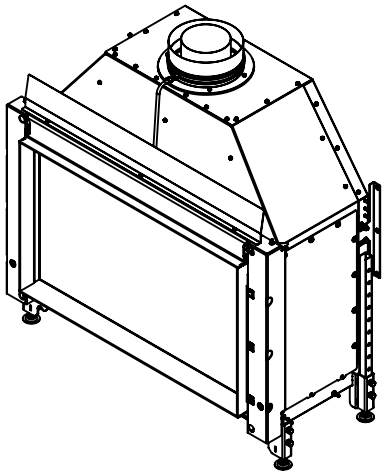

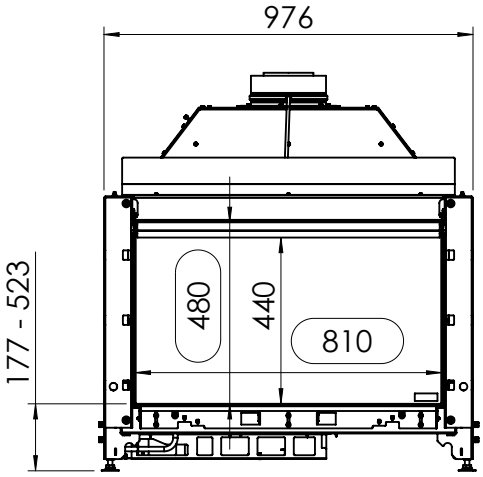

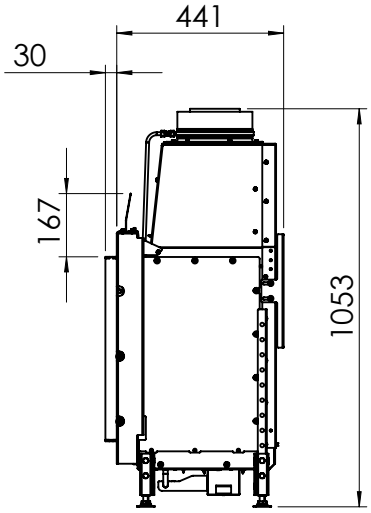

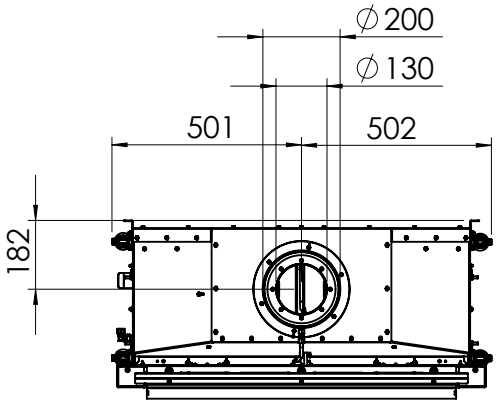

All dimensions in mm. Modifications under reserve. 14-8-2016 sheet 1 / 3

© All rights reserved. This drawing is sole property of Kal-fire. No part of this drawing may be reproduced, or published, in any form or in any way without prior written permission from Kal-fire.

KALFIRE
FIREPLACES

G80-48F

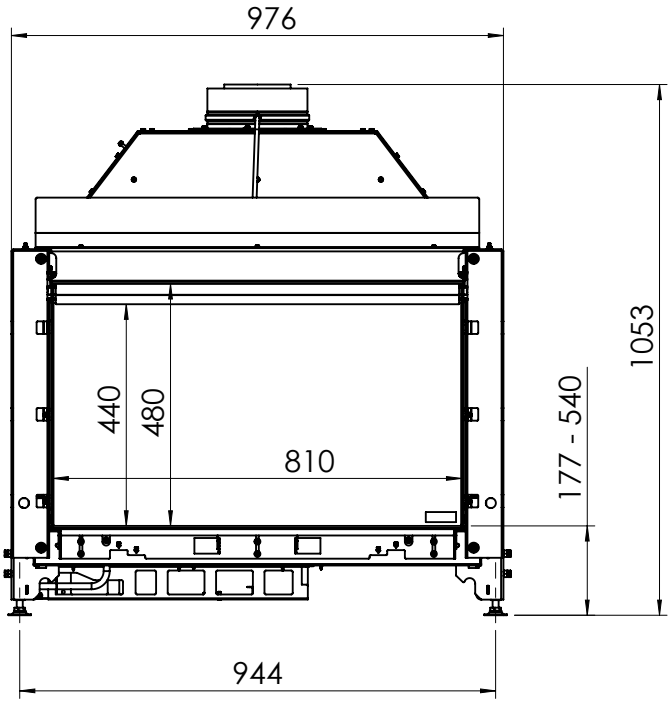

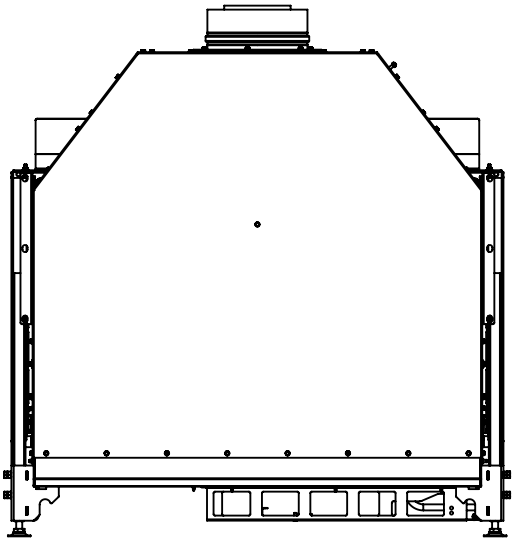

All dimensions in mm. Modifications under reserve. 14-8-2016 sheet 2 / 3

© All rights reserved. This drawing is sole property of Kal-fire. No part of this drawing may be reproduced, or published, in any form or in any way without prior written permission from Kal-fire.

KALFIRE
FIREPLACES

G80-48F

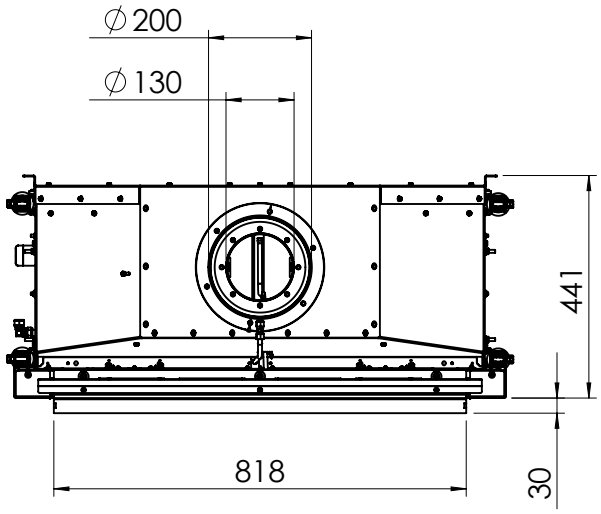

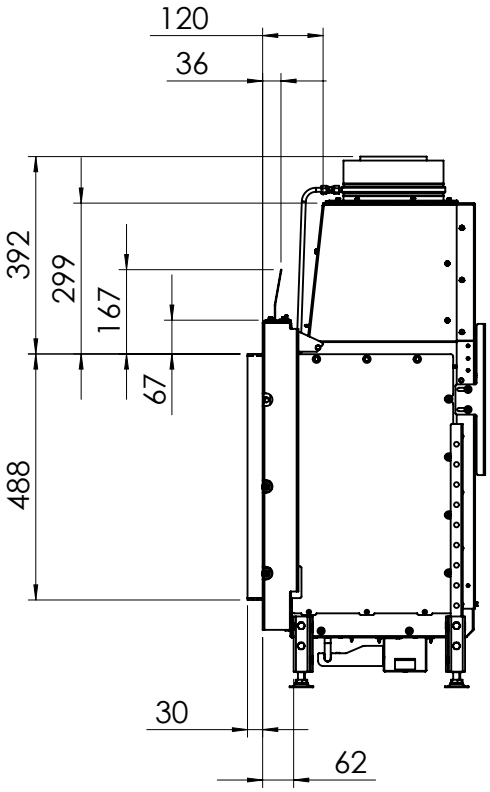

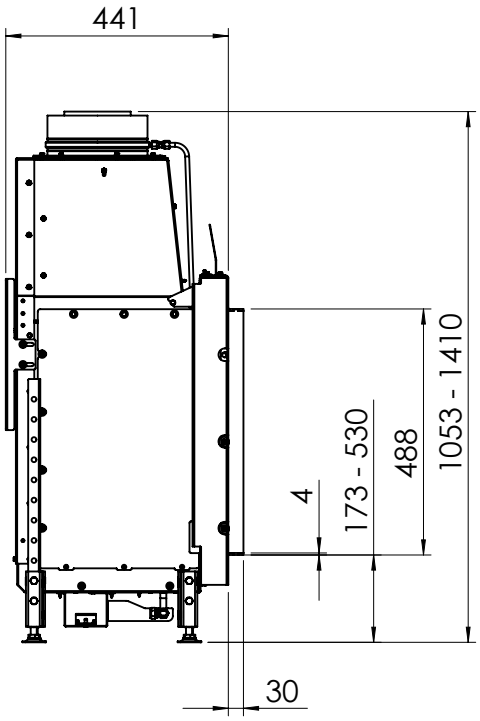

All dimensions in mm. Modifications under reserve.

14-8-2016 sheet 3 / 3

© All rights reserved. This drawing is sole property of Kal-fire. No part of this drawing may be reproduced, or published, in any form or in any way without prior written permission from Kal-fire.